# Pallet Specification Sheet

Pallet ID: ppc3242-4B3SR

PPC
Plastic Pallet Creations

Top View:

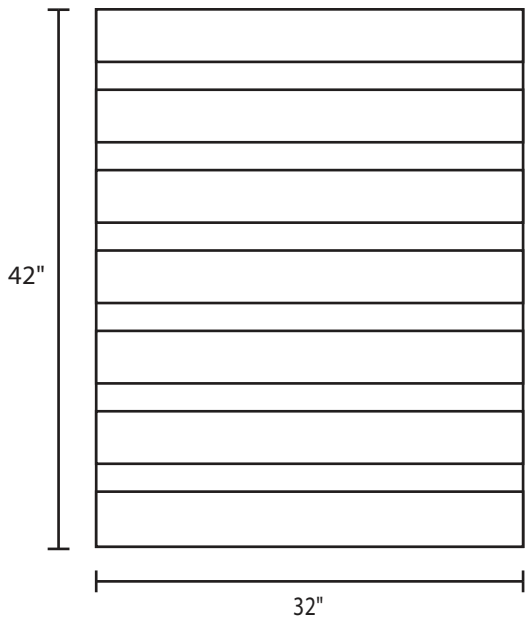


Bottom View:

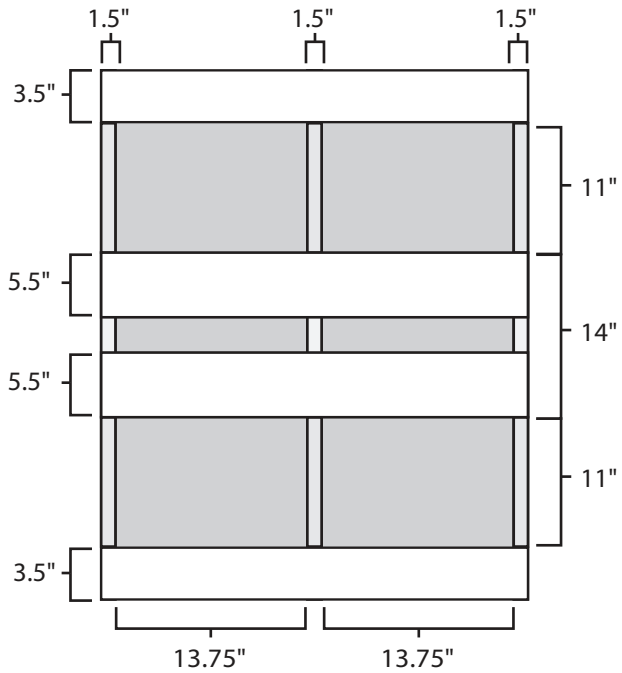


Side View:

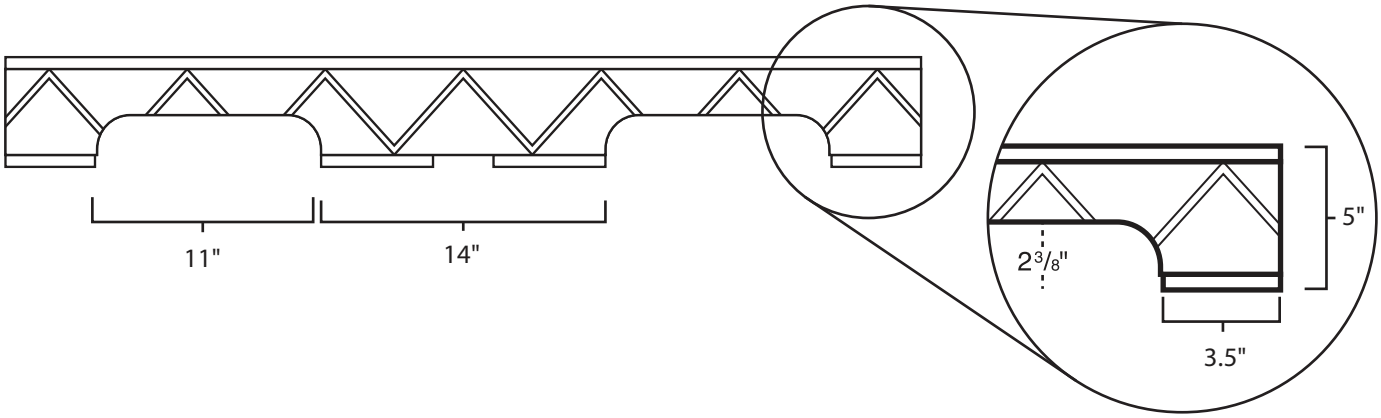


## Components & Specifications:

Dimensions: 32" x 42" x 5"
Weight: 37.5lbs
Stackable

Dynamic Capacity: 2,000lbs
Static Capacity: 15,000lbs
#10-12X1-1/2 Screws

All parts made of recycled plastic
All parts made in USA
Pallet is fully recycleable

Tolerances +/- 3/8"


Plastic Pallet Creations
101 Forrest Street,
Stanwood, IA 52337
319-248-5550


PPC
Plastic Pallet Creations
www.ppcpallets.com