Pallet Specification Sheet

Pallet ID: ppc-4875.5-4B4SF-3XS-CS-CP

PPC
Plastic Pallet Creations

Top View:

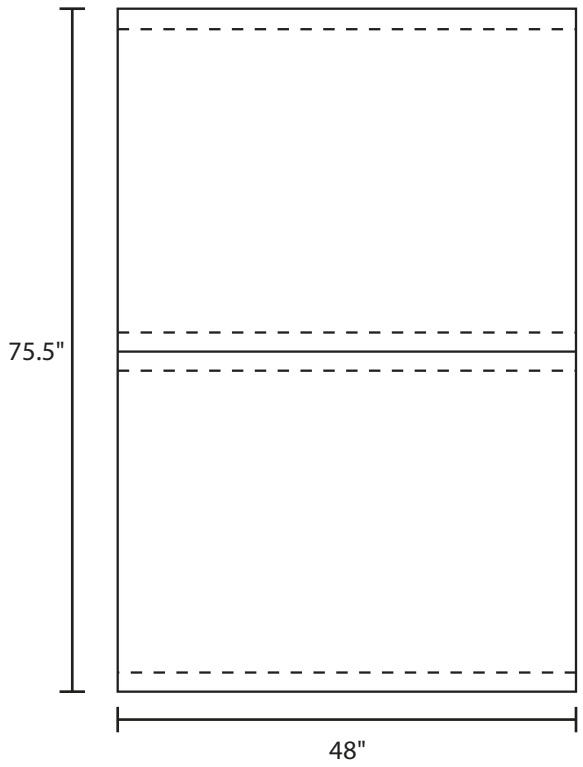

Bottom View:

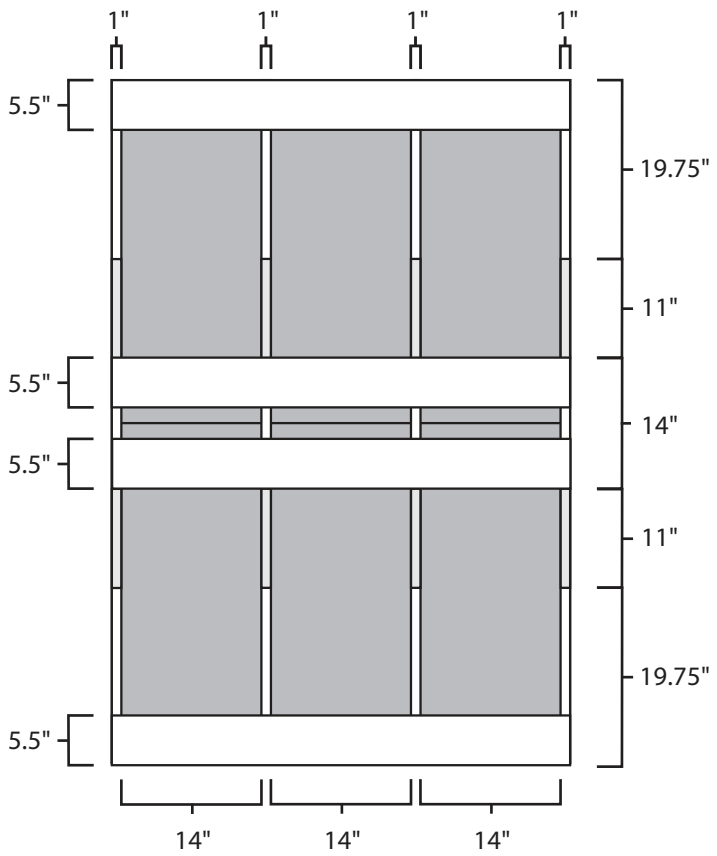

Side View:

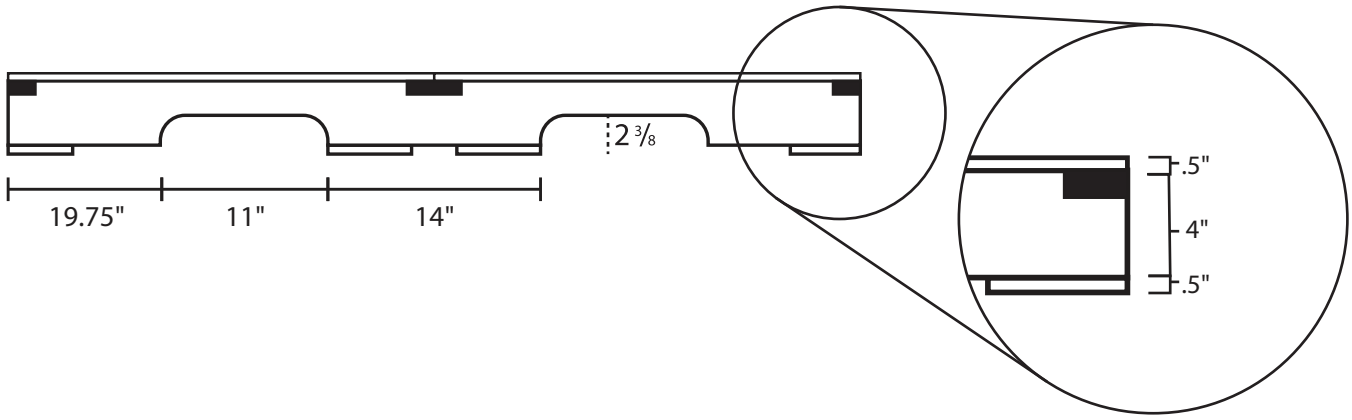

Components & Specifications:

Dimensions: 48" x 75.5" x 5"
Weight: 98 lbs
Stackable

Dynamic Capacity: 3,500lbs
Static Capacity: 15,000lbs
#10-12X1-1/2 Screws

All parts made of recycled plastic
All parts made in USA
Pallet is fully recycleable

Tolerances +/- 3/8"

Plastic Pallet Creations
101 Forrest Street,
Stanwood, IA 52337
319-248-5550

PPC
Plastic Pallet Creations
www.ppcpallets.com